Zonecheck

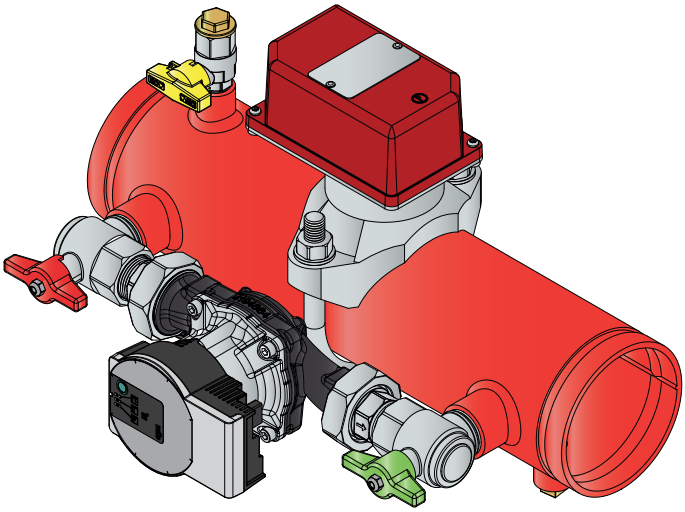

Instruction manual for
key-switch models

ZC-IB-03/23-2

INFORMATION
While every effort has been made to ensure that the information contained within this document is correct, Project Fire makes no guarantee for completeness or accuracy. Project Fire Products Ltd reserves the right to change product specifications, designs and standard equipment without notice and without incurring obligation.

Zonecheck is a registered product name of Project Fire Products Ltd. European patent No. 0907833.

Contents

Pre-checks

Before you install Zonecheck follow these simple steps:

1 Open the box and remove all packaging.
2 Check you have the correct size manifold.
3 Check that you have the correct model for your site (right or left handed).
4 Check that there is a key-switch and key in the box.
5 Inspect the product to make sure it hasn't been tampered with. If you have any queries please contact your supplier.

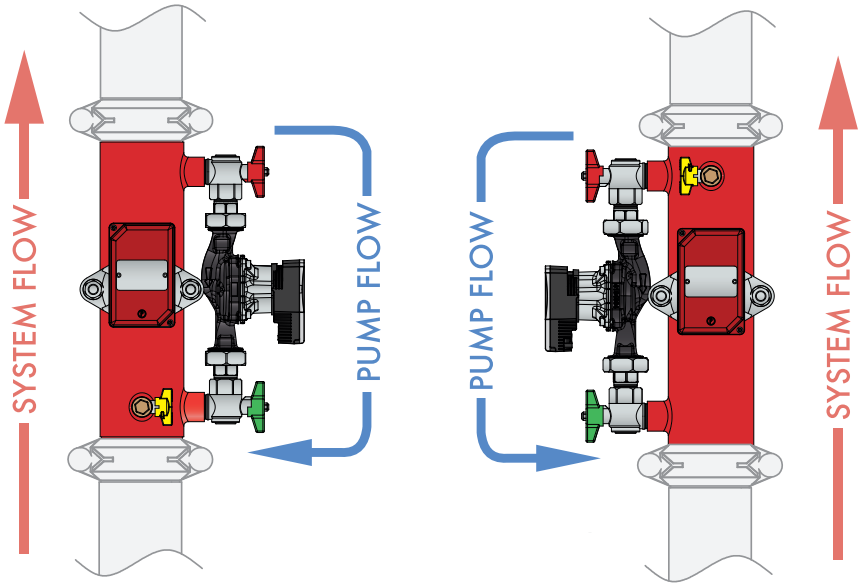

LEFT HANDED **RIGHT HANDED**

Installation

Zonecheck should be installed by a competent fire sprinkler installer and wired up by a qualified electrician.

1 Contact building management to inform them of the proposed works.
2 Isolate and drain down selected zone.
3 Orientate the Zonecheck in accordance with the diagrams in this booklet.
4 Install the Zonecheck with two approved grooved couplings (not supplied).
5 Double check that the sprinkler flow arrows on Zonecheck are facing the correct direction (see diagrams included in this booklet).
6 Fit the key-switch to the wall in a suitable location that is easy to reach from floor level.
7 Wire the Zonecheck pump and flow-switch to the key-switch in accordance with the diagrams in this booklet.
8 Wire the flow-switch to the appropriate fire-detection panel in accordance with the diagrams in this booklet.
9 If required, wire monitoring cables from zone valve to key-switch.
10 Wire the appropriate power supply to the key-switch.
11 Proceed to Commissioning instructions.

DO NOT ATTEMPT TO MODIFY ZONECHECK,
TAMPERING WILL VOID THE WARRANTY.

Commissioning

1 Contact the responsible person to authorise a flow-switch test.
2 Ensure the Zonecheck red and green valves are both open.
3 Attach a barrel nipple and hosepipe to yellow vent valve on the Zonecheck.
4 Turn the key-switch to SELF TEST.
5 Carefully open the vent valve on the Zonecheck unit until only water is being expelled (this can take up to 10 minutes).
6 Turn the key-switch to STANDBY.
7 Close vent valve, remove the barrel nipple and hose and replace plug.
8 Now connect the barrel nipple and hose pipe to the test valve at the furthest point on the zone or use the test/drain valve provided on the Zonecheck unit.
9 Discharge water through the hose (this is a once only commissioning test).
10 Wait for the FLOW-SWITCH ACTIVATED to illuminate on the key-switch (this could take up to 30 seconds).
11 Close the test/drain valve.
12 Turn the Zonecheck Key-switch to SELF TEST and check the PUMP RUNNING and FLOW-SWITCH ACTIVATED LEDs are illuminated (this could take up to 30 seconds).
13 Confirm the test signal has been received at the fire alarm panel.
14 Turn the Key-switch key to STANDBY.
15 If the zone valve is wired to key-switch, check function of VALVE FAULT LED on the key-switch, which should illuminate when valve is not in the fully open position.
16 Ensure that the end user is instructed on how to carry out a routine test and explain procedure for when VALVE FAULT LED is illuminated (if connected).
17 Fix operating instructions to wall, preferably next to the key-switch. Also place the Zonecheck Isolation valve location sticker in a suitable position to let others know where the unit is.
18 Fill in & hand over a completion certificate. Make sure that the responsible person has been made aware that the system is back online.

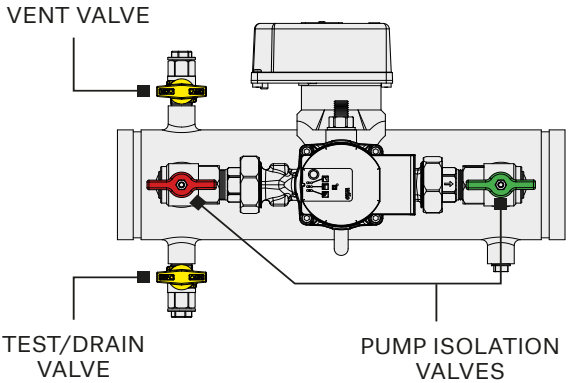

Testing

TEST ONE ZONECHECK

1 Insert the key into the key-switch and turn to self test (the pump light will activate).
2 When the flow-switch operates, the FLOW-SWITCH ACTIVATED light will illuminate (please wait for up to 30 seconds for the flow-switch to operate).
3 Return to standby position and remove the key.

TEST A GROUP OF ZONECHECKS

1 To test all the Zonechecks in the group, insert the key into the key-switch and turn to GROUP TEST.
2 Look at the central fire control panel to confirm simultaneous activation of all the flow-switches within the group.
3 Return to STANDBY position and remove the key.

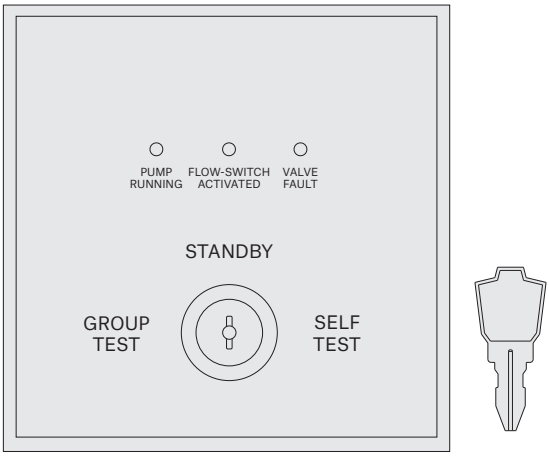

PLEASE NOTE

When activating the Zonecheck pump to initiate a flow-switch test (particularly on 150mm/6" and 200mm/8" Zonechecks), the pump may take up to 10 seconds to reach full speed/flow. This may mean that the set flow-switch triggering delay is slightly greater than expected."

Orientation

- The pump direction-of-flow arrow faces the opposite direction to the system flow.
- Do not position the flow-switch on the underside of the pipe.
- For riser applications, make sure the pump flow runs opposite (downwards) to the sprinkler system flow.

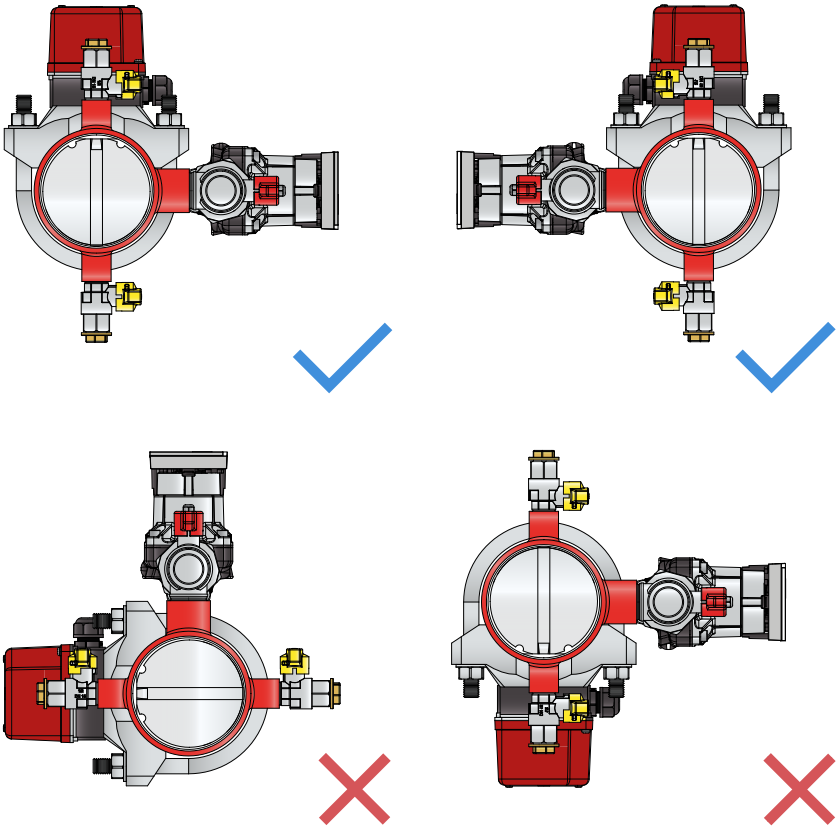

PUMP NOT HORIZONTAL

FLOW-SWITCH ON UNDERSIDE OF PIPE

Typical Connection

A typical multi-occupancy Zonecheck Installation. For an example of a typical riser installation visit our website at www.projectfire.co.uk.

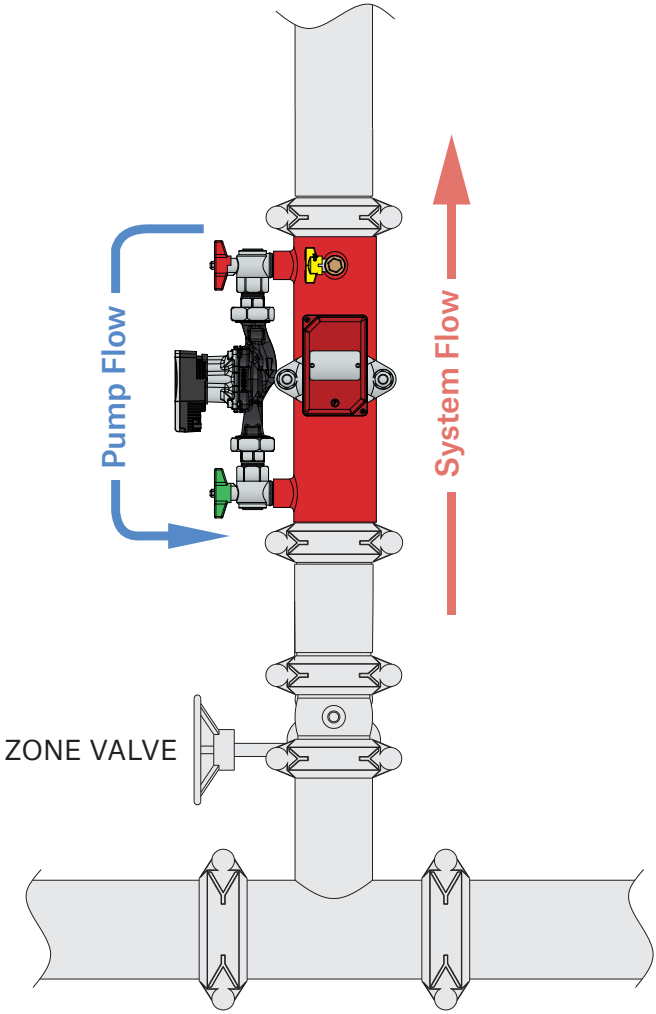

(View from above)

Stand Alone Test Wiring

Please note Zonecheck should be installed by a competent fire sprinkler installer and wired up by a qualified electrician.

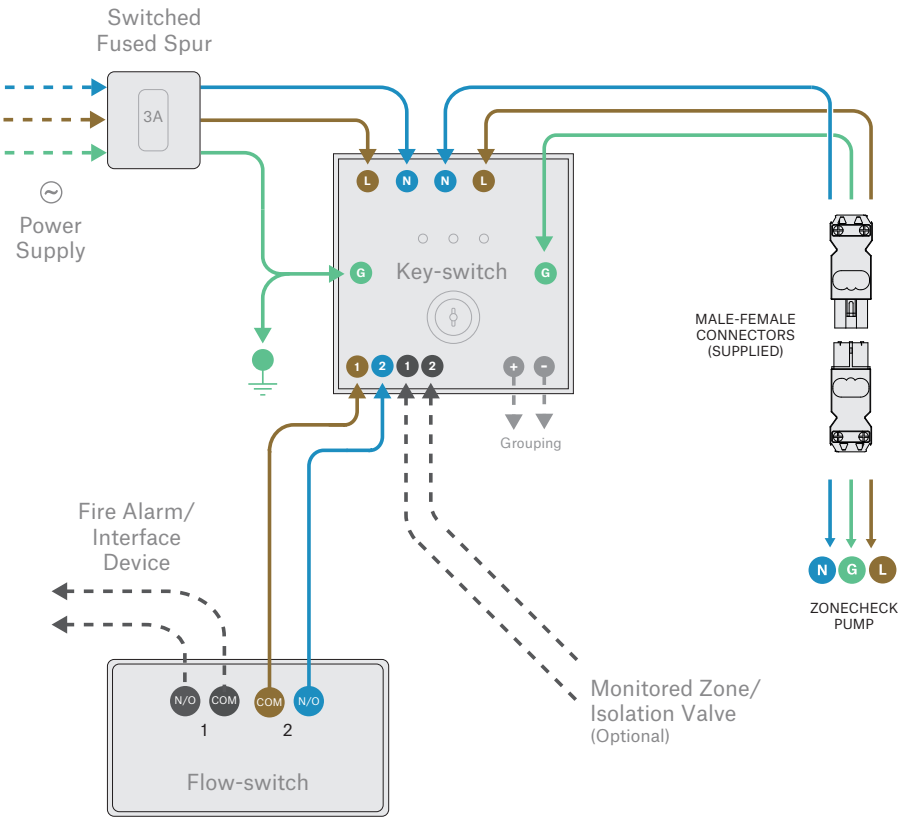

Additional Wiring Guidance

Your Zonecheck will come with male/female connectors which are connected to the pump. Simply remove the free (female) side of the connector by using a terminal screwdriver (A). Remove the cover from the connector using a PH1 screwdriver to expose the terminals (B). Then wire from the key-switch to the connector ensuring that the wiring matches the symbols on the connector. Finally, press the two connectors together again until they click/lock together.

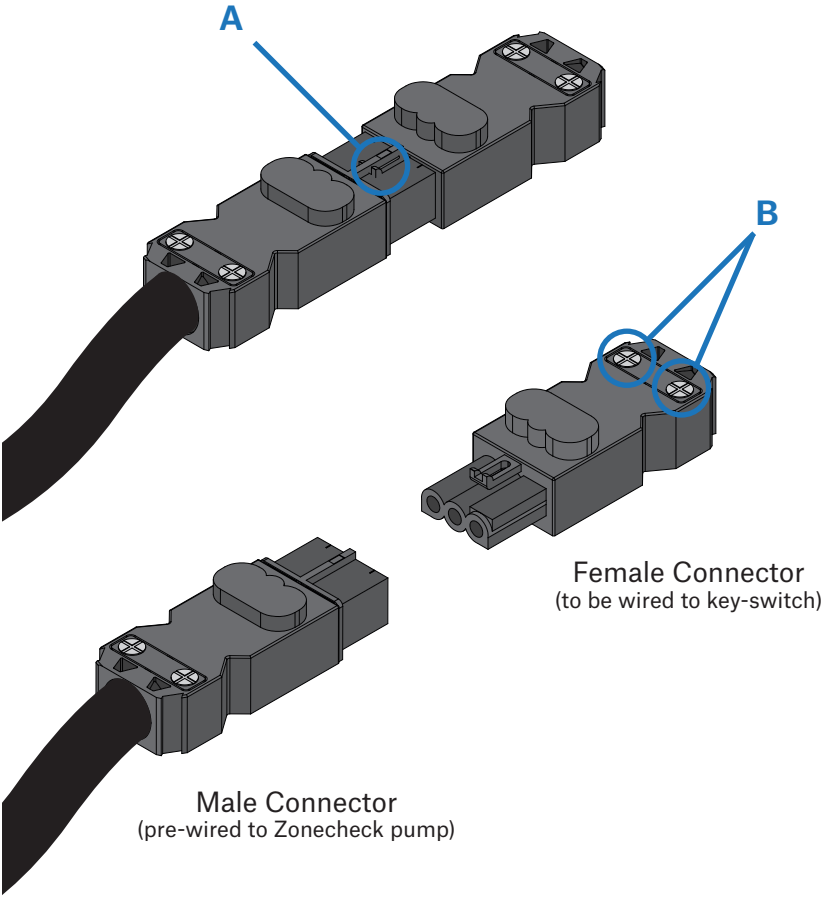

Group Test Wiring

Upto 25 Zonechecks can be tested simultaneously when the Zonecheck units are wired in parallel via interconnect by turning the master key-switch to GROUP TEST. The maximum cable distance of 300m should not be exceeded when grouping key-switches.

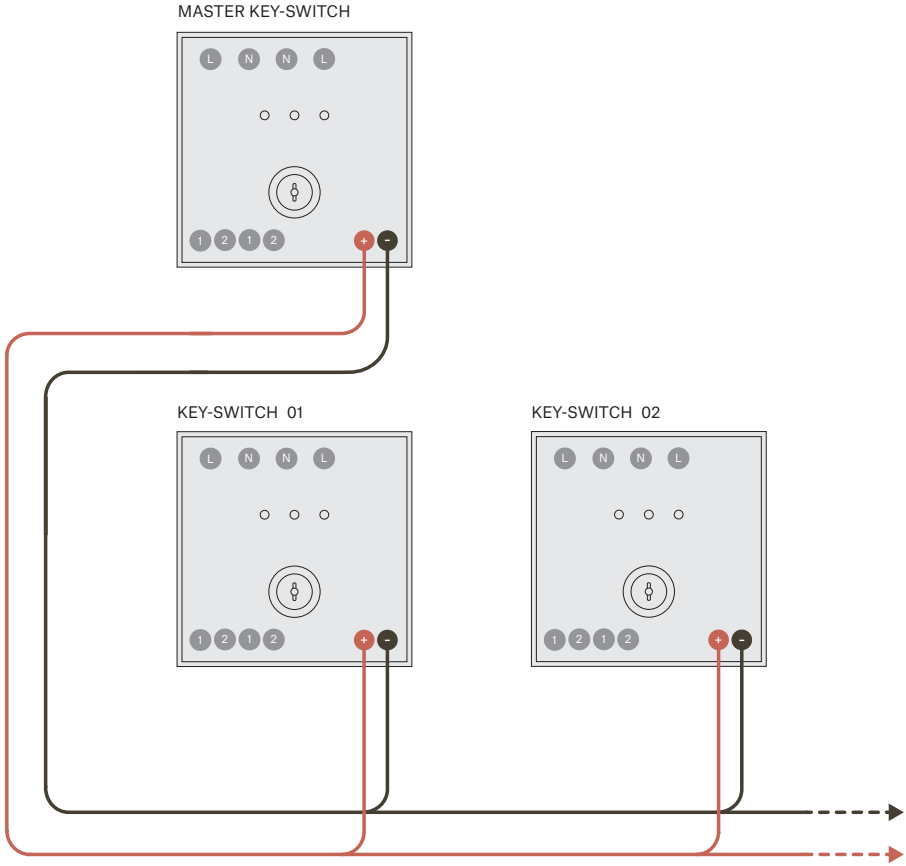

Flow-switch Wiring

Zonecheck should be installed by a competent fire sprinkler installer and wired up by a qualified electrician.

The following diagrams show typical fire-alarm/interface connections for flow-switch end-of-line resistors. The wiring setup depends on the make and model of the fire panel used. Always refer to your specific fire-alarm panel instructions for more information.

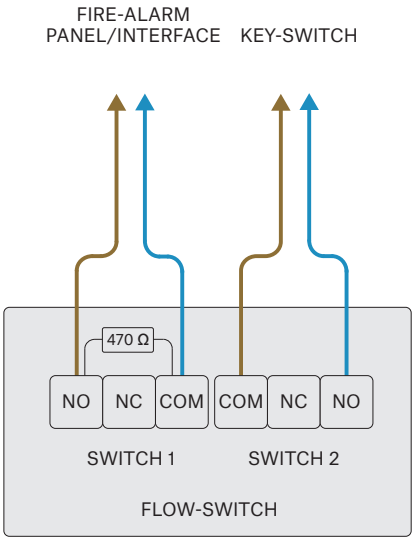

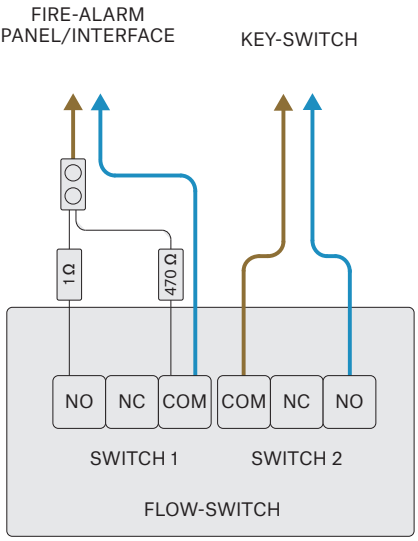

DIAGRAMS SHOW TYPICAL APPLICATIONS ONLY.
ALWAYS REFER TO FIRE-ALARM INSTRUCTIONS.

Dimensions

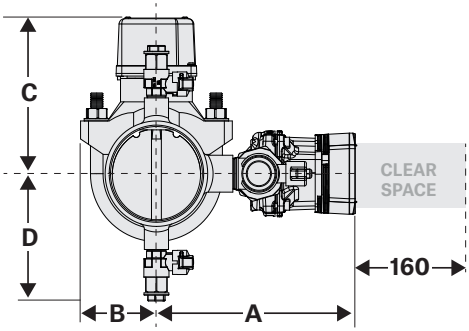

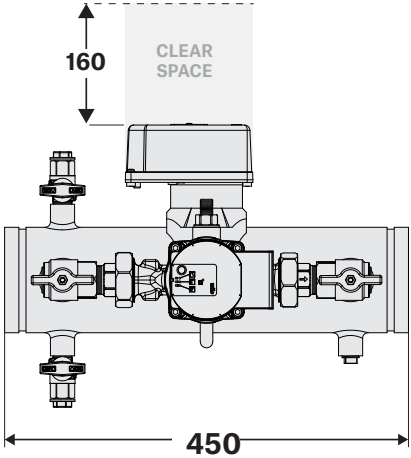

ØIN	ØMM	A	B	C	D
2”	50	210	66	145	116
2½”	65	215	66	155	124
3”	80	220	85	165	130
4”	100	225	85	170	140
6”	150	250	115	195	170
8”	200	275	150	225	195

Specifications

ZONECHECK	
Working Pressure Rating	Water, 12 bar (175 psi) maximum
Operating Temperature Range	0°C - 49°C (32°F – 120°F)
Pipe Diameter (nominal)	50, 65, 80, 100, 150 & 200mm (2-8”)
Approvals	LPCB, VdS, UL, FM*
IP rating	54

CIRCULATION PUMP	
Type	Wilo Para
Operating Voltage	230vac (±10%) 50Hz
Full Load Current	0.82 A
Power Rating	75 W maximum
IP Rating	IPX4D

FLOW-SWITCH	POTTER
Type	VSR-EU
Contact Rating	10A @125/250 VAC; 2.0Amps @ 30 VDC
IP Rating	IP54
Time Delay	0 - 30 s

KEY-SWITCH	
Mounting	Flush-mounting
Type	ZCKYSE
Operating Voltage	Single-phase 230v 50Hz
Internal consumption	7.5 W maximum
Operation Modes	Self Test: Wired locally
	Group Test: Interconnected
Standby (Ready State)	No LED
Test Initiation	‘Pump Running’ LED
Flow-switch Activation	‘Flow-switch Activated’ LED
Valve Fault	‘Valve Fault’ LED

Troubleshooting

Zonecheck should be troubleshooted by a competent fire sprinkler installer and wiring checked by a qualified electrician.

No lights on key-switch	Isolate the power then check the Key-switch wiring against the wiring diagram. Confirm the power supply has been connected properly.
Only PUMP RUNNING LED illuminates.	Check the red & green Zonecheck valves are open. Check Zonecheck has been installed facing the correct way. Remove the plastic lid from the flow-switch, push and hold the trigger with your finger for 30 seconds. If the Flow Switch Activated LED (on the key-switch) operates see below. If not check the wiring against the diagram.
Pump runs hot & does not operate the flow-switch.	Pump is air-locked. Remove plug on yellow vent valve on Zonecheck and attach hosepipe ready for venting. With a bucket or cloth ready, carefully open the vent valve on the Zonecheck unit to remove the air until water is flowing to ensure all air is bled from the unit. Close vent valve and activate test. Repeat process if necessary and replace plug when complete. Scan code for video of how to vent a Zonecheck pump.
Pump runs while in STANDBY.	Key-switch has been incorrectly wired. Isolate the power then check the wiring diagram and rewire. If there is still a problem, contact technical support at Project Fire.

Important Information

- Zonecheck should be installed by a competent fire sprinkler installer and wired up by a qualified electrician.
- Ensure Zonecheck is installed both mechanically and electrically commissioned and tested prior to leaving site.
- Ensure protection to Zonecheck is employed whenever there is an extended period from installation to commissioning.
- If the Zonecheck could be activated when the sprinkler system zone is drained down then it is vitally important that the Zonecheck red and green valves are left in the closed position, to ensure the motor is not accidentally run dry and damaged. (Please ensure the commissioning engineer is aware of the closed Zonecheck valve status).
- Always use a flat faced wrench for Zonecheck commissioning.
- The suggested location for the key-switch is at low level for visibility and access.
- The suggested location for Master key-switch (see group testing) is adjacent to the fire alarm panel.
- Fix operating instruction to wall, preferably next to key-switch.
- Each Zonecheck is factory assembled and tested. Do not attempt to reconfigure. Tampering will void the warranty.
- Maximum working pressure - 12 bar (175 psi), test pressure - 18 bar (260 psi).
- Use Zonecheck flow-switch testers in wet-pipe systems only. Do not use in dry pipe, deluge, or pre-action systems.
- Only activate the Zonecheck key-switch when the valves are opened and the sprinkler system is full.
- The pump direction-of-flow arrow faces the opposite direction to the system flow.
- A local monitored zone/isolation valve can be wired to the key-switch for added functionality. If connected, when the valve is not in the fully open position the key-switch 'VALVE FAULT' LED will illuminate.

Standards & Approvals

It is a requirement of BS EN 12845 that you should carry out a functional test on a fitted flow-switch every quarter. All international fire code standards such as NFPA, FM etc. all make the flow-switch test mandatory. Zonecheck can carry out this test simply, at the turn of a key.

*Various models of the Zonecheck family are approved by LPCB, UL, FM and VdS.

RESPONSIBLE DISPOSAL

Project Fire recommend that the product needs to be disposed of correctly when the product reaches the end of its life cycle.

- Disposal of business or commercial waste should be in compliance and accordance with government guidance and regulations.
- Disposal of electrical waste should be in compliance and accordance with “Waste Electrical and Electronic Equipment recycling” (WEEE).

One Year Warranty

Project Fire Products warrants its enclosed Zonecheck flow-switch tester to be free from defects in materials and workmanship under normal use and service for a period of one year from date of manufacture. Project Fire Products makes no other express warranty for this flow-switch tester. No agent, representative, dealer or employee of the Company has the authority to increase or alter the obligations or limitations of this warranty. The Company's obligation of this warranty shall be limited to the repair or replacement of any part of the flow switch tester, which is found to be defective in materials or workmanship under normal use and service during the one-year period commencing with the date of manufacture.
After phoning Project Fire's number, 01889 271 271 for a Return Authorization number, send defective units postage prepaid to Project Fire, Pasturefields Industrial Estate, Pasturefields Lane, Hixon, Staffs, ST18 0PH. Please include a note describing the malfunction and suspected cause of failure. The Company shall not be obligated to repair or replace units, which are found to be defective because of damage, unreasonable use, modifications, or alterations occurring after the date of manufacture. In no case shall the Company be liable for any consequential or incidental damages for breach of this or any other Warranty, expressed or implied whatsoever, even if the loss or damage is caused by the Company's negligence or fault.

PROJECT
FIRE®

PROJECT FIRE PRODUCTS LTD
PASTUREFIELDS LANE
HIXON, STAFFORDSHIRE
ST18 0PH, UK

+44 (0)1889 271271
SUPPORT@PROJECTFIRE.CO.UK
WWW.PROJECTFIRE.CO.UK